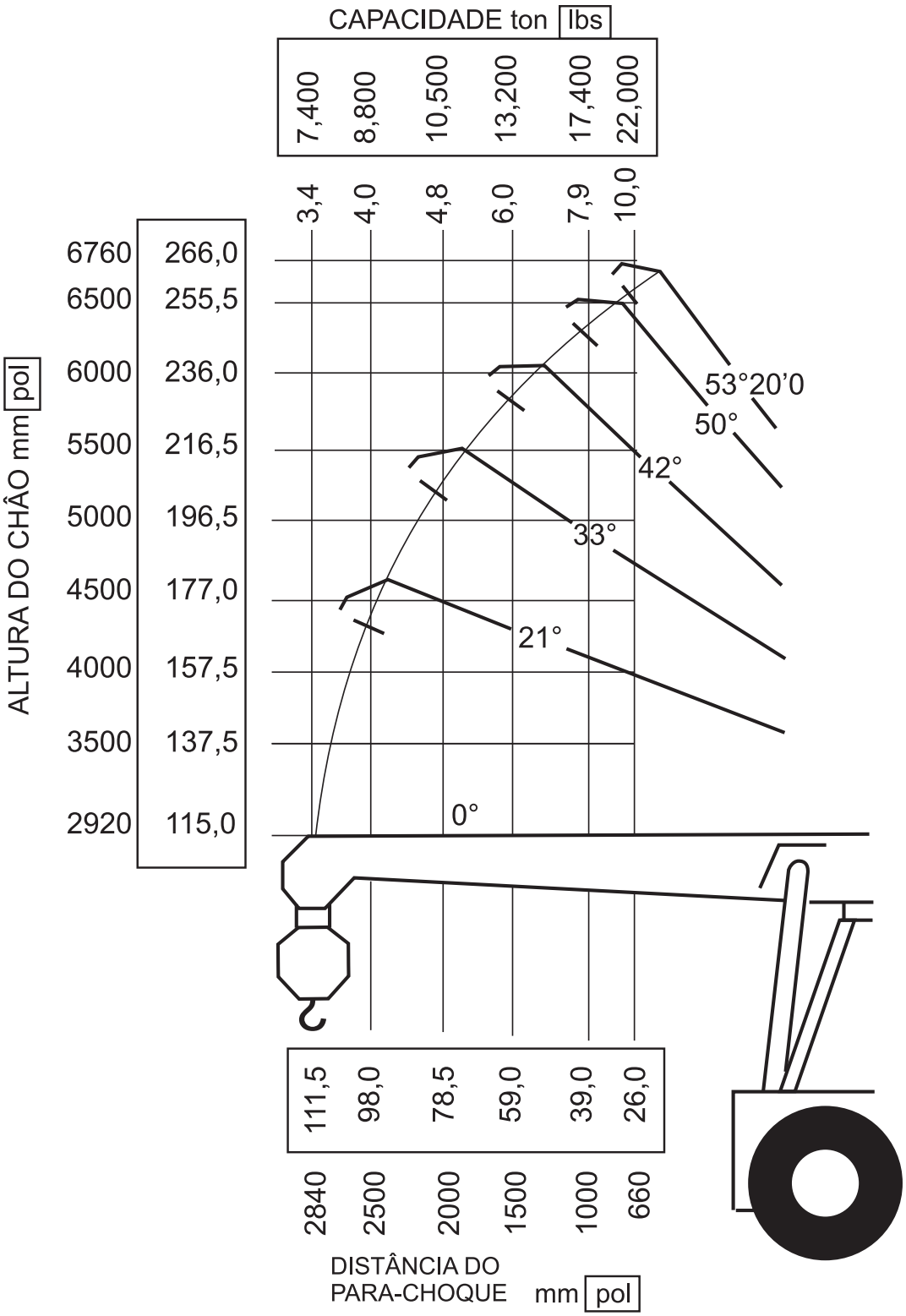
CAPACIDADE ton lbs
7,400
8,800
10,500
13,200
17,400
22,000
3,4
4,0
4,8
6,0
7,9
10,0
ALTURA DO CHÃO mm pol
6760 266,0
6500 255,5
6000 236,0
5500 216,5
5000 196,5
4500 177,0
4000 157,5
3500 137,5
2920 115,0
53°20'0
50°
42°
33°
21°
0°
111,5
98,0
78,5
59,0
39,0
26,0
2840
2500
2000
1500
1000
660
DISTÂNCIA DO
PARA-CHOQUE mm pol

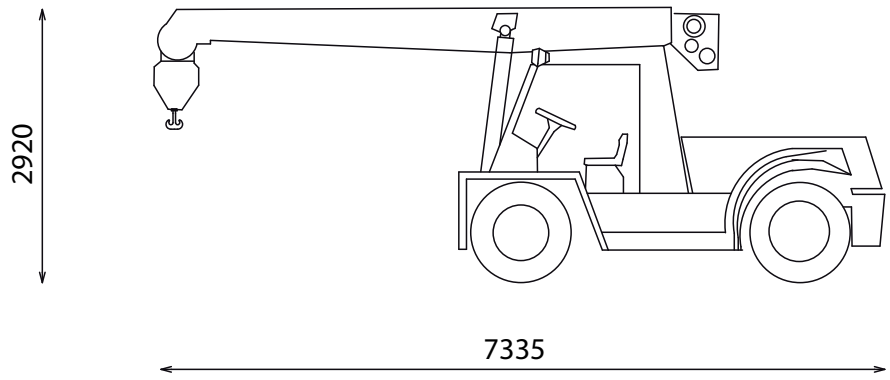
2920
7335